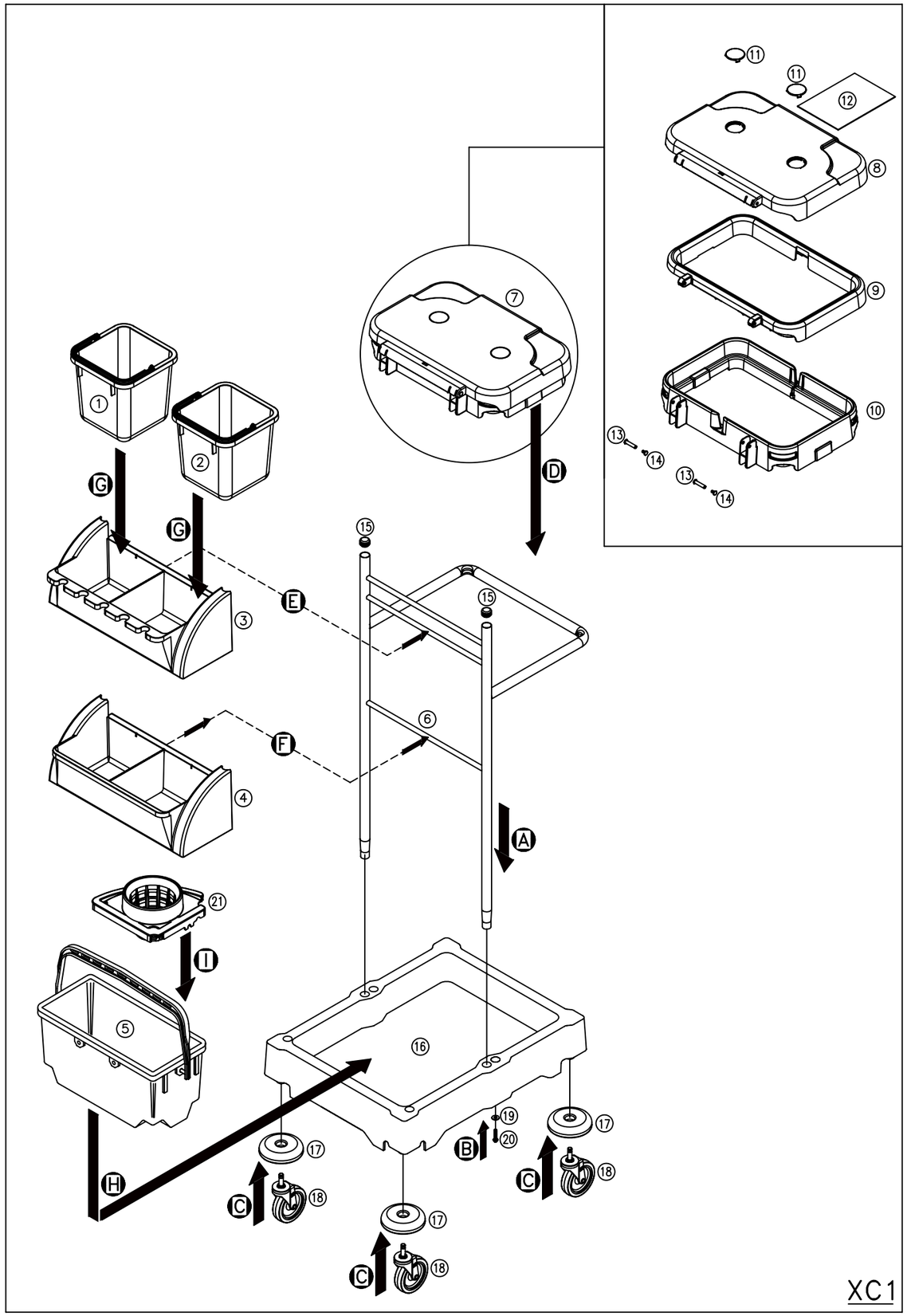

COMP. No. 234164
DRAWING: EXP-0595
ISSUE:A05 08/02/2006

ITEM	PART No:	DESCRIPTION:
1	628184	Blue 6 Litre Bucket
2	628183	Red 6 Litre Bucket
3	227480	Blue Clip On Half Tray C/W Moulded Hooks
4	227481	Blue Clip On Half Tray
5	627192	NCA-15B 18 Litre Blue Pail
6	418612	Rear Upright Frame (Painted Silver)
7	338196	Blue Lid Moulding Assembly
8	227496	Blue Lid Moulding
9	227497	Blue Bag Locking Frame Moulding
10	227498	Blue Bag Frame Moulding
11	223128	Blue Colour Coded Disc Moulding
12	223131	Clear Panel
13	227501	Female Pivot Pin Moulding
14	227499	Male Pivot Pin Moulding
15	20637V	24.4mm Tube End Stop
16	318787	Blue Trolley Base Moulding (Printed Numatic)
17	227479	Buffer Moulding
18	204060	3" Castor
19	221154	M8 Washer
20	219555	M8 x 25mm Long Socket Bolt
21	227551	Black Twistmop Wringer
Not Shown	206996	Blue Hole Plug Set
Not Shown	604201	CCA-32/SCA-249 120 Litre Poly Bag (20 Bags On A Roll)